NORTHWOOD TOWN CENTER

4800 IRVINE BOULEVARD | IRVINE, CA 92620

SHOPCORE PROPERTIES
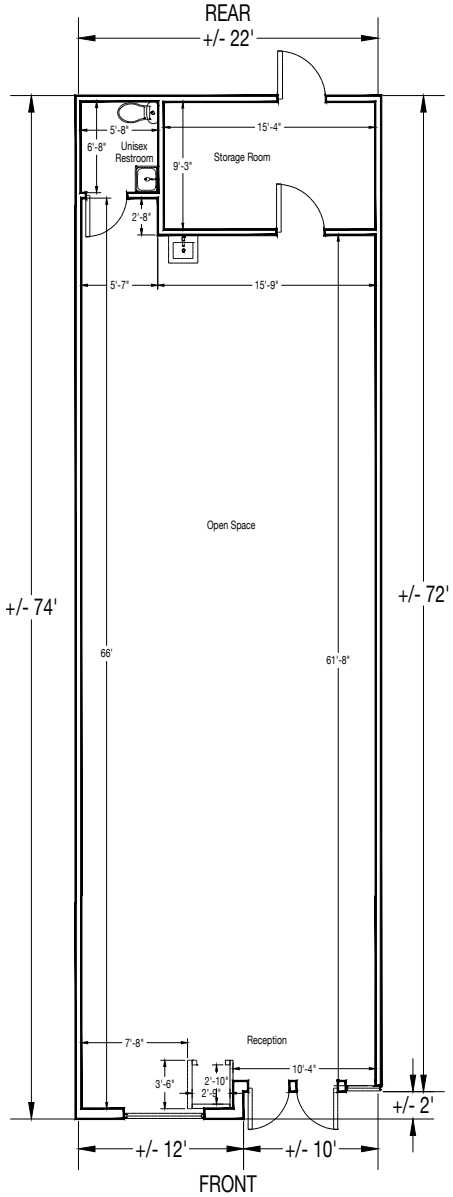
LOD | Unit 19