HERITAGE HILL

21751 LAKE FOREST DRIVE | LAKE FOREST, CA 92630

SHOPCORE PROPERTIES
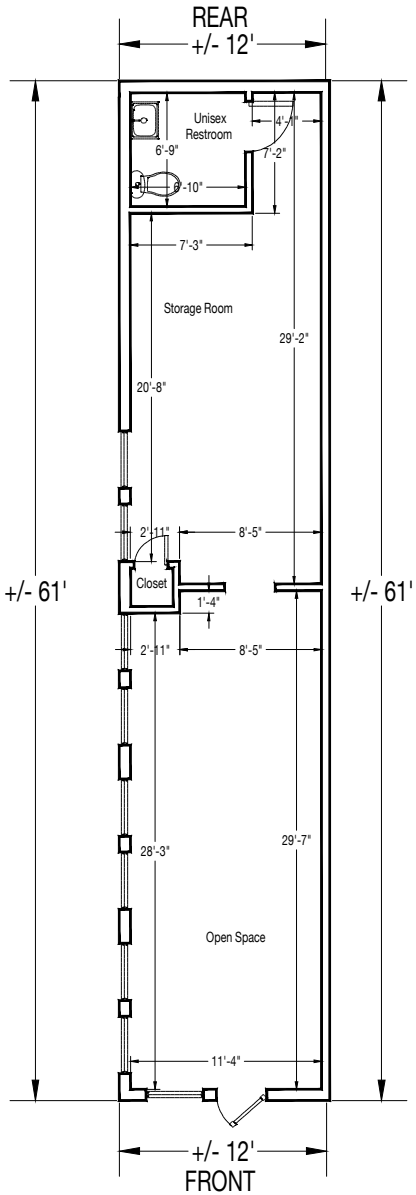
LOD | Unit 11